TATA ACE GOLD
BSVI

Manufacturing	: 12/2018
No. Of Owners	: 1
Duplicate Keys	: N/A
KM Driven	: 82,185
Fuel Type	: Diesel
Reg State	: Uttar Pradesh
Reg City	: Ghaziabad
Insurance Expiry	: 25/09/2026
RC Availability	: Yes
Permit	: N/A
Permit Date Validity	: N/A

VEHICLE DETAILS

Registration Number	**UP14HT6082**	RTO	**GHAZIABAD**
City	**Ghaziabad**	RTO NOC Issued	**N/A**
Inspection At	**On-Site**	Under Hypothecation	**Yes**
Branch	**Ghaziabad**	CNG/LPG Instalment	**No**
To be scrapped	**No**	Chassis Number Embossing	**Yes**
Manufacturing	**12/2018**	PUC Validity	**23/07/2026**
Registration	**02/2019**	MV Tax (Upto)	**LTT**
Lifespan Remaining	**3 Years**	Fitness (Upto)	**08/04/2027**
RC Mismatch if any	**No**		

SUMMARY

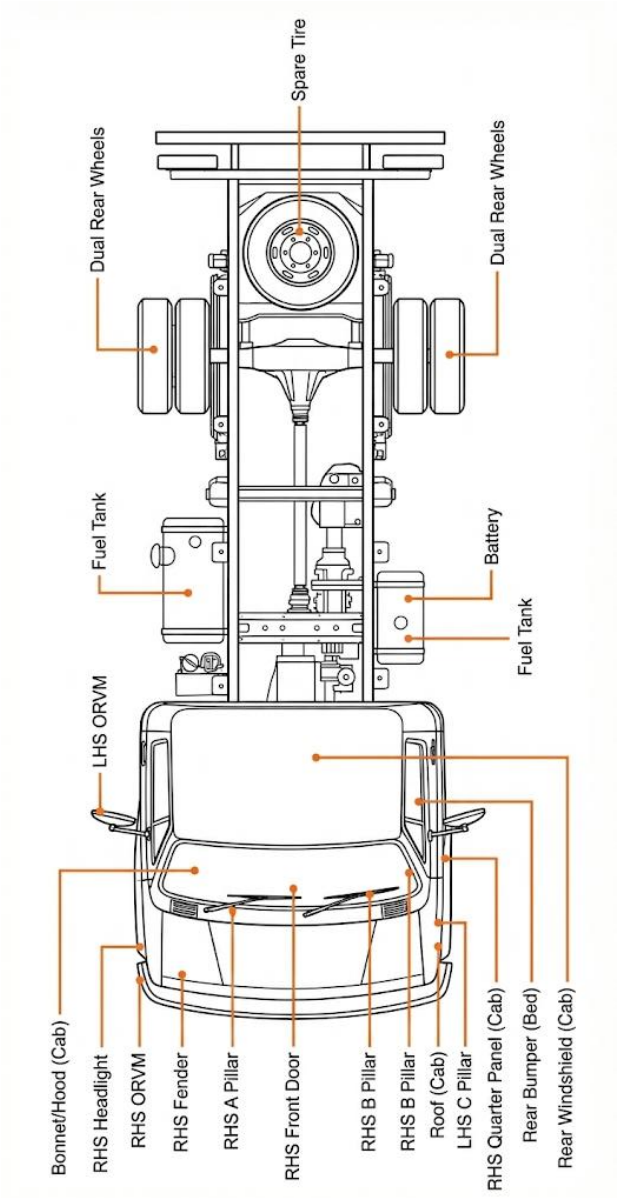

Exterior + Tyres

Part	Sub-Part	Status	Remarks / Condition
Bumper	Front / Rear	!	Slight Scratch on the right-hand side
Cabin Panels	LHS / RHS	✓	

Bonnet / Hood	—	✓	
Roof (Cab)	—	✓	
Fender	LHS / RHS	✓	
Doors	LHS / RHS	!	Slight dent on the Left door
Windshield	Front / Rear	✓	
Pillars	A / B / C	✓	
Load Body Floor	—	✓	
Side Panels	—	!	Minor scratches on rear side of the RHS payload
Tailgate	—	✓	
Chassis Visible Area	—	✓	
Tyre	1	✓	60-70%
Tyre	2	✓	60-70%
Tyre	3	✓	50-60%
Tyre	4	✓	20-30%
Tyre	Spare	-	N/A
Wheels / Rims	—	✓	
Electricals + Interior			

Part	Sub-Part	Status	Remarks / Condition
Battery	—	✓	
Wiring Harness	—	✓	
Headlights	LHS / RHS	✓	
Tail Lamps	LHS / RHS	✓	
Indicators	—	✓	
Horn	—	✓	
Instrument Cluster	—	✓	
Warning Lights	—	✓	
Dashboard	—	✓	
Seats	Driver / Co-driver	✓	
Seat Belts	—	✓	
Cabin Fan / Blower	—	✓	
Wipers	—	✓	
Engine + Transmission			
Part	**Sub-Part**	**Status**	**Remarks / Condition**
Cold Start	—	✓	
Idling	—	✓	

Blow-by	Dipstick Test	✓	
Exhaust Smoke	—	✓	
Engine Oil	—	✓	
Coolant	—	✓	
Oil Leakage	—	✓	
Fuel Injection	—	✓	
Turbocharger	—	✓	
Clutch	—	✓	
Gear Shifting	—	✓	
Gearbox Noise	—	✓	
Propeller Shaft	—	✓	
Differential	—	✓	

Steering / Suspension + Brakes

Part	Sub-Part	Status	Remarks / Condition
Steering Free Play	—	✓	
Steering Box	—	✓	
Kingpin / Ball Joint	—	✓	
Leaf Springs	—	✓	

U-Bolts & Clamps	—	✓	
Shock Absorbers	—	✓	
Front Axle	—	✓	
Brake Pedal Feel	—	✓	
Brake Pull	—	✓	
Brake Lines	—	✓	
Parking Brake	—	✓	

Vehicle Photo Documentation Sheet

PROFILE	PHOTOGRAPH
1	
2	

3	
4	

5	
6	

7	
8	

9	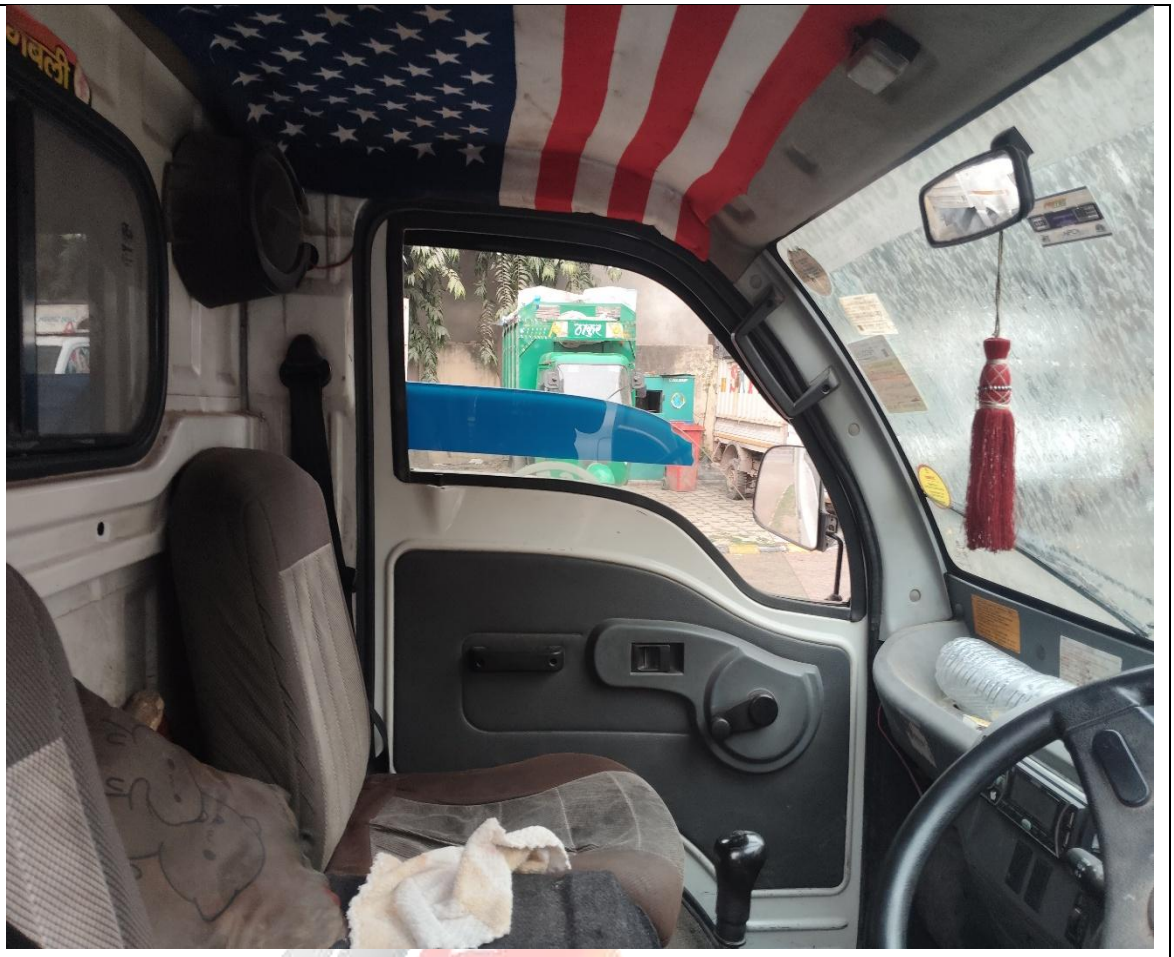
10	

11	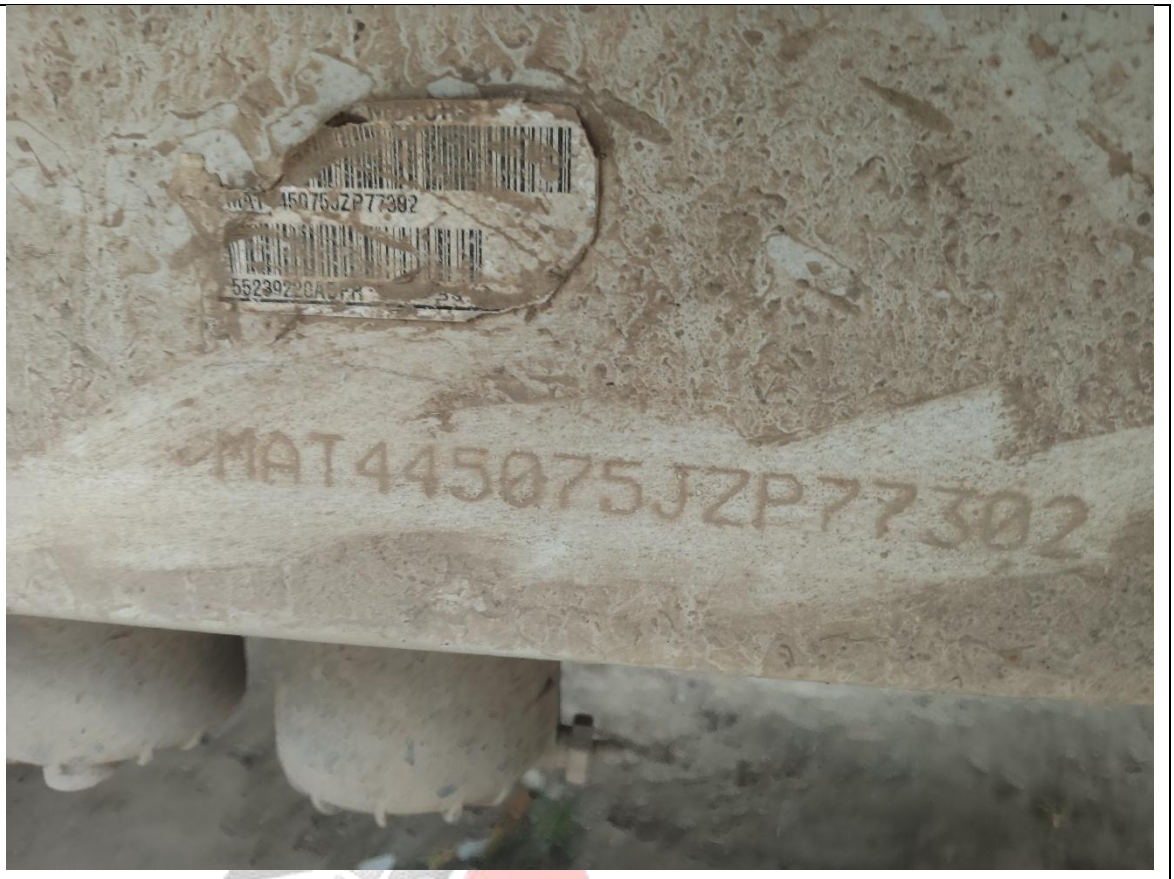
12	

13	
TYRE 1	

TYRE 2	
TYRE 3	

TYRE 4	